G750UK .75A 6V&12V

Lead Acid

Wet | Gel | MF | EFB | AGM

Auto | Marine | RV | Powersport | Lawn & Garden

UltraSafe® Battery Charger™

NOCO UK

Type G 220V

Charge Fully Drained Batteries Up To **30Ah**.

Maintain All Battery Sizes.

ATVs, Lawn Mowers, Motorcycles, Cars, Trucks, Boats, RVs, Tractors, Equipment, And More.

Ultra-compact, rugged, and portable **UltraSafe®** Smart Charger. Features **spark proof technology** and **reverse polarity protection**. Charges **2X faster** than ordinary chargers. Stay connected 24/7 with **zero overcharge**.

Start-Stop.
Counteracts increased cyclic energy demands placed on batteries in micro-hybrid vehicles.

Firewall.
Multi-level safety barrier prevents unsafe and abnormal conditions.

Optimization.
Stabilizes internal battery chemistry for increased performance and longevity.

Load Tracking.
Dynamically changes charge current when a load is placed on the battery.

Diagnostics.
Intuitive visual diagnostic tool for detecting reverse polarity, low-voltage or damaged batteries.

Energy Save.
Minimizes energy consumption when full power is not needed.

Thermal Monitor.
Internal temperature sensors adjust charge based on ambient climate.

Safe.
Protects against reverse polarity, sparks, over-charging, overcurrent, open-circuits and overheating.

Memory.
Returns to last-selected mode when restarted.

Interactive.
Alters the charging process based on organic battery feedback.

Recovery.
Applies a high-voltage pulse charge when low-voltage, sulfation, or lost capacity is detected.

Rugged.
Dirt, water, UV, impact and crush resistant.

CANBUS.
Automatically enables the charging port to charge CANBUS systems.

Maintenance Plus.
Keeps the battery fully charged without over-charging, indefinitely.

Charge **6V&12V** Batteries Up To 40Ah. Maintain All Battery Sizes.

The NOCO Company
30339 Diamond Parkway, #102
Glenwillow, OH 44139 | USA
1.800.456.6626

no.co

NOCO
Since 1914

Charging Modes

Mode	Explanation
Standby	**No Power** In standby mode, the charger is not charging or providing any power to the battery. Energy Save is activated during this mode, drawing microscopic power from the electrical outlet. When selected, an orange LED will illuminate.

12V NORM	**14.5V | .75A | 2-30Ah Batteries** For charging 12-volt Wet Cell, Gel Cell, Enhanced Flooded, Maintenance-Free and Calcium batteries. When selected, a white LED will illuminate.
6V NORM Press & Hold	**7.25V | .75A | 2-30Ah Batteries** For charging 6-volt, Wet Cell, Gel Cell, Enhanced Flooded, Maintenance-Free and Calcium batteries. When selected, a white LED will illuminate.

Technical Specifications

Input Voltage AC:	Type G, 220-240V VAC, 50-60Hz	Type of Batteries:	6V & 12V
Working Voltage AC:	Type G, 220-240V VAC, 50-60Hz	Battery Chemistries:	Wet, Gel, MF, CA, EFB, AGM
Efficiency:	85% Approx.	Battery Capacity:	2-30Ah (12V), 2-30Ah (6V), Maintains All Battery Sizes
Power:	13W Max		
Low-Voltage Detection:	2V (12V), 2V (6V)	Housing Protection:	IP60
Back Current Drain:	<5mA	Cooling:	Natural Convection
Ambient Temperature:	0°C to +40°C	Dimensions (LxWxH):	4.45 x 2.67 x 1.54 Inches
Charger Type:	8 Step, Smart Charger	Weight:	0.49 Pounds

Charging Steps

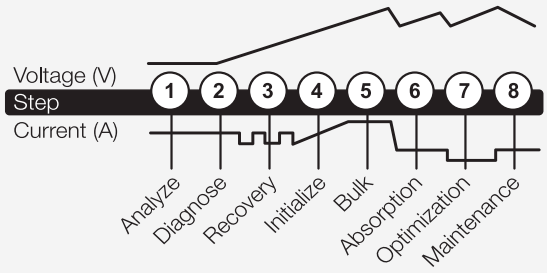

What's In The Box

- G750 Smart Charger
- Battery Clamp Connectors w/ Integrated Eyelets
- User Guide and Information Guide & Warranty

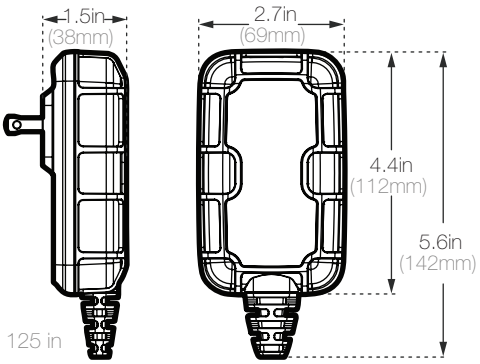

Retail Packaging:
Dimensions: 6.46"x3.78"x4.02"
Weight: 1.08lbs
UPC: 0-46221-14012-5
Inner Carton:
Dimensions: 6.77"x4.09"x4.53"
Weight: 1.26lbs

Master Carton:
Dimensions: 17.24"x14.25"x9.84"
Weight: 21.65lbs
Quantity: 16
UCC: 10046221140122
Units Per Pallet: 576 Units

CONFORMS TO EN60335-1,EN60335-2-29, EN62233, EN55014-1,EN55014-2,EN61000-3-2,EN61000-3-3

DC Cable: 125 in

The NOCO Company
30339 Diamond Parkway, #102
Glenwillow, OH 44139 | USA
1.800.456.6626

no.co

NOCO
Since 1914